ES100 Series Wireless Integrated Electric Strike

The most versatile way to retrofit an opening with real-time online access control

The ES100 Series Wireless Electric Strikes make online access control simple and affordable.

For the first time, the industry leading features of the 1500 and 1600 series electric strikes have been paired with Aperio® wireless technology to provide even more affordable access control retrofit options for remote control and monitoring. Available in both Convenient (non-monitored) and Secure (monitored) model options. Compatible with most models of cylindrical and mortise latchbolt locksets, including 1" deadbolts. Simply put, the ES100 Series Electric Strike is the affordable, universal retrofit solution that offers flexible configuration options and dynamic adjustability without the need to run wires.

Features

Standard Features (All Models)

- 2.4 GHz Aperio wireless technology
- Integrates with existing access control systems and credentials
- Audit trail limited by access control system
- Battery operated for stand-alone operation
- SecuriCare three-year, no-fault, no questions asked warranty

Electric Strike Features

- Non-handed
- Fail secure operation (standard)
- Static strength 1,500 lbs
- Dynamic strength 70 ft-lbs
- Interchangeable faceplates and accessories
- Factory configured monitored (M) and non-monitored options
  - » M Security – Monitored (Latch and Door Position Monitor with Request to Exit)
  - » MH Security – Monitored Kit with AH20 1:1 Wiegand Hub
- Integrated locked state and tamper monitoring
- Field adjustable integrated shim for changing door conditions
- Fully finished faceplate, keeper, case, trim, and strike body
- Stainless steel construction
- Tamper resistant
- Strike body depths
  1500: 1-3/8" [35mm]
  1600: 1-5/8" [41mm]

Card Reader Features

- Supports HID multiCLASS SE® card technologies
- Supports NFC & BLE mobile access credentials
- BiColor LED visual status indicators; Red/Amber or Green/Amber

Grade 1 | SecuriCare Warranty | Mortise Locks with Deadbolt | Mortise Locks without Deadbolt | Cylindrical Locksets | Fire Rated | Windstorm Rated | Burglary Rated

NOTE: The ES100 Electric Strike is available as either a pre-paired lock and hub kit (no certification required) or as a field configurable component (requires Aperio® Certified Integrator certification). Pre-paired kits support limited features. Field configured devices are required in order to support all options. Visit IntelligentOpenings.com to learn more.

Accessories *(For use with all models)*

- **157** Torx screws
- **HESCUT-MTK** Metal template kit
- **Latch Guard**
- **OPT-1SRK** Spring replacement kit
- **OPT-1LM** Single lock monitor
- **EXT-10-ANT** Aperio® Hub External Antenna (Omni-directional)
- **APD10USB** Aperio Radio Dongle*
- **ACC10** Credential test cards
- **HSA-HPK** Hard powered kit

** Only available through ACP/CI channel*

For use with 1500 models (XXX – finished to match)

- **1500-104-XXX** Lip extension trim adapter
- **1500-106-XXX** 4500 adapter and trim enhancer kit

For use with 1600 models (XXX – finished to match)

- **1600-104-XXX** Lip extension trim adapter
- **1600-106-XXX** 1006 adapter and trim enhancer kit (filler plate finished to match, black trim enhancer)

Specifications

Certifications

- UL 294 listed
- FCC Part 15 & Industry Canada Compliant
- CE Red – Radio Equipment Directive – 2014/53/EU
- UL 1034 burglary-resistant
- UL 10C fire rated, 3-hour single door (fail secure only)
- UL 10C fire rated, 1-1/2 hour double door (fail secure only)
- CAN/ULC-S2014 fire door conformant
- NFPA-252 fire door conformant
- ASTM-E152 fire door compliant
- California Fire Marshall listed
- ANSI/SDI A250.13 windstorm resistant
- Florida Building Code approved TAS 201, 202, 203
- ANSI-ASTM E330
- RoHS compliant

Frame Application

- Metal
- Wood

Electrical

- Estimated Battery Life: 45,000 Cycles*
- (2) "AA" lithium batteries *(included)*
  - » AA LR6 (1.5 V) Lithium Ion Batteries required. Use of other types of batteries, such as alkaline, will significantly decrease battery life.
- microUSB port for emergency power

**All battery life claims are approximate and based on a set configuration profile. Battery performance is based on pre-defined system settings such as battery chemistry and battery model used, credential presentation settings (LED/buzzer), UHF polling period, UHF status intervals, and operations per day. Actual battery performance will vary and depends on the factors above.*

Environmental

Electric Strike

- **Operating Temperature** -13° to 140° F [-25° to 60° C]
- **Operating Humidity** 0 to 90% relative humidity non-condensing

Card Reader

- **Operating Temperature** 14° to 140° F [-10° to 60° C]
- **Operating Humidity** 0 to 90% relative humidity non-condensing
- Tested to IP65

Card Technology HID® multiCLASS SE®

- **High Frequency (13.56 MHz)**
  - » HID iCLASS®
  - » HID iCLASS SE® (SIO®-enabled)
  - » HID iCLASS® Seos®
  - » HID MIFARE® SE
  - » HID DESFire® EV1 SE
  - » MIFARE CLASSIC
  - » DESFire® EV1
  - » DESFire® EV2 (legacy mode)
- **Low Frequency (125 kHz)**
  - » HID Prox®
  - » AWID
  - » EM4102
  - » IOProx
- **Mobile Access Credentials**
  - » NFC
  - » HID BLE Mobile Access
  - » SEOS iOS Apple Wallet

Updated 7/23/24 Patent pending and/or patent www.assaabloydss.com/patents

Copyright © 2024, Hanchett Entry Systems, Inc., an ASSA ABLOY Group company. All rights reserved. Reproduction in whole or in part without the express written permission of Hanchett Entry Systems, Inc. is prohibited.

ES100-15 Dimensions

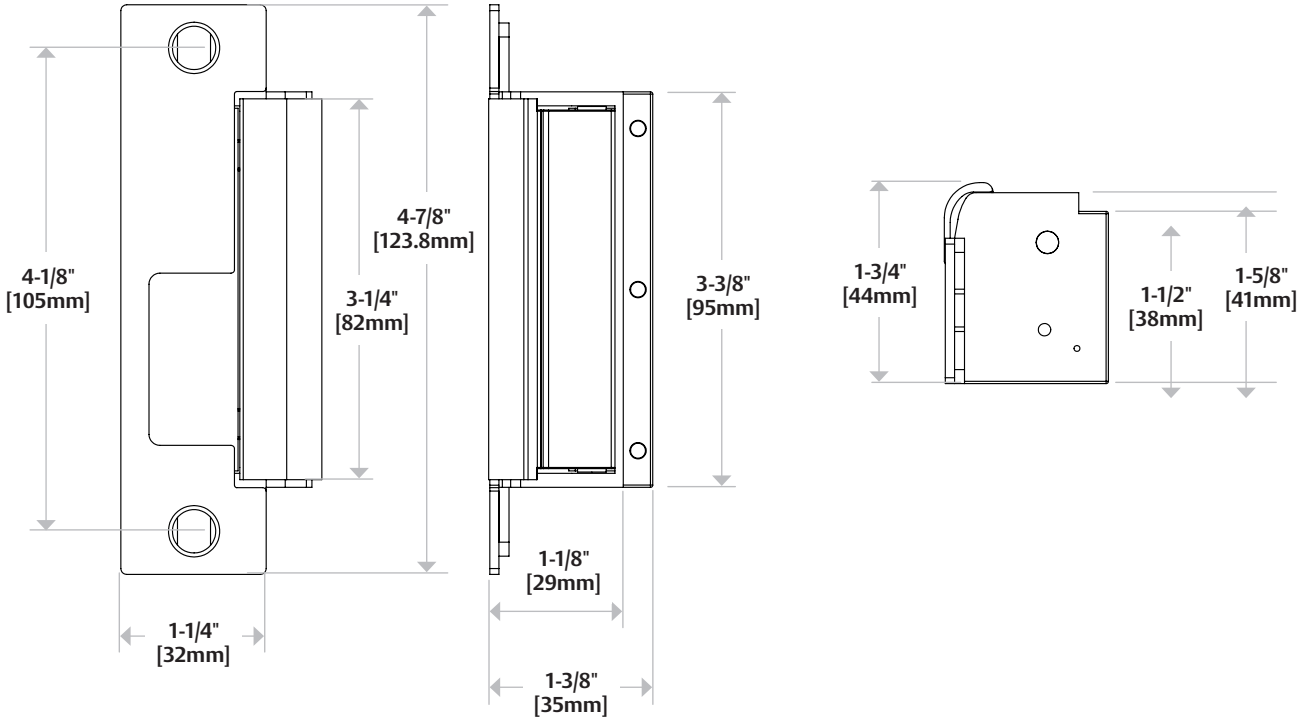

ES100-16 Dimensions

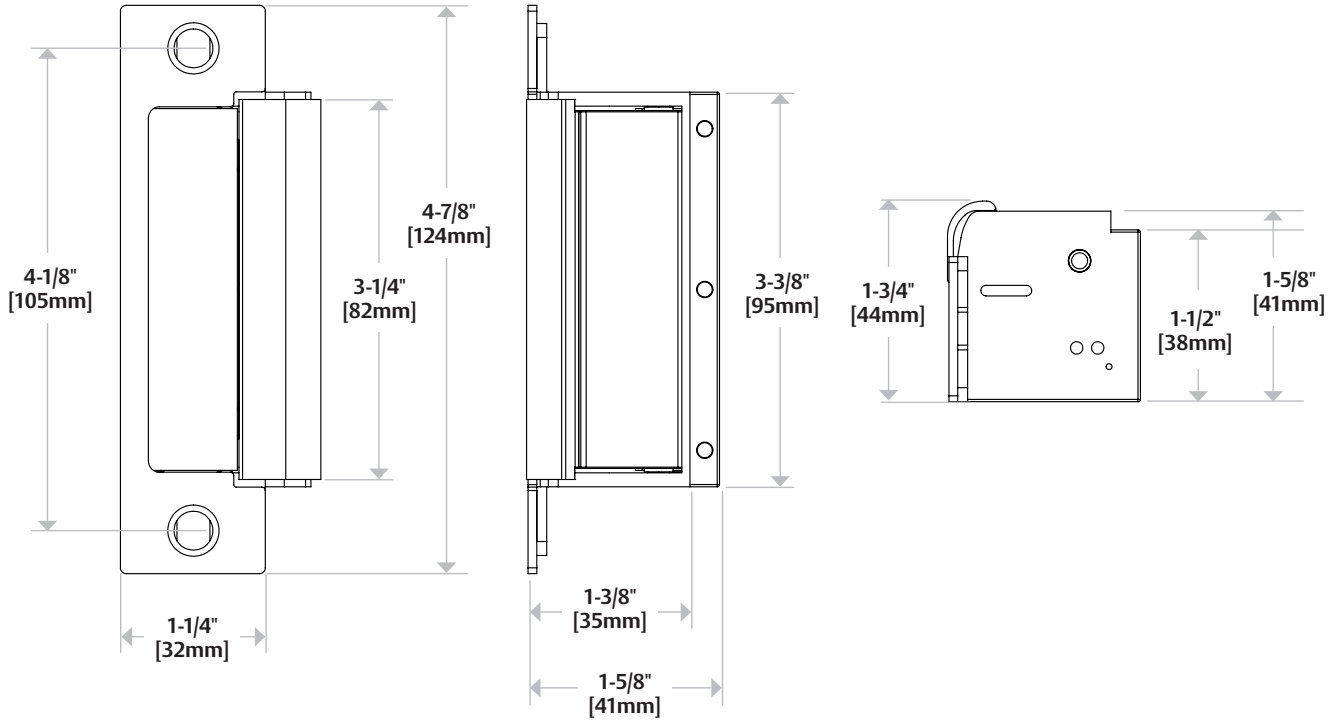

ES100 Reader Dimensions

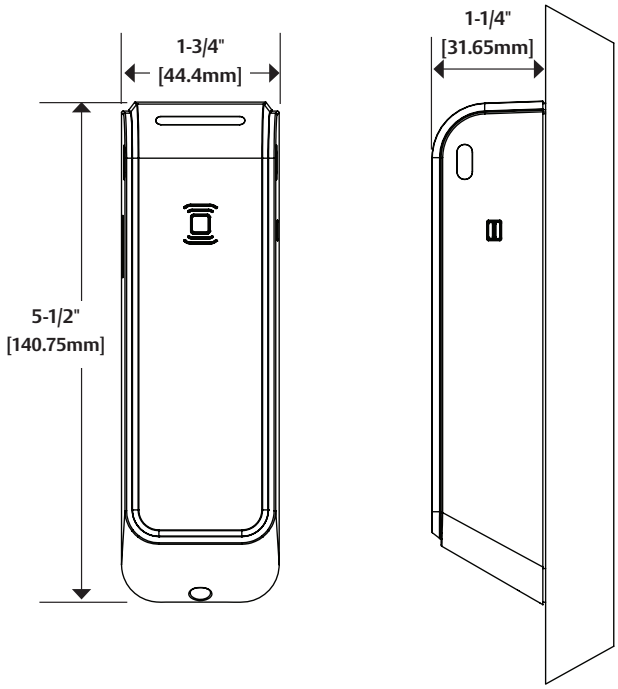

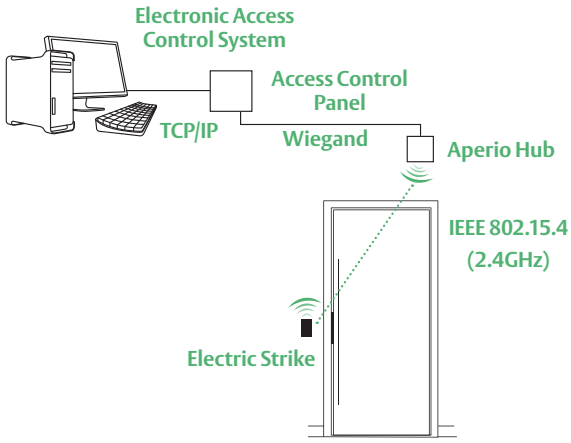

Typical Configuration

Local wireless communication eliminates the cost and inconvenience of wiring in and around the door, without the hassle of complex site surveys.

- **Reader Harness Length** 9" [228.6 mm]
- **Strike Harness Length** 7" [177.8 mm]
- **Strike DPS/Latch Monitor Harness Length** 10" [254mm]

How to Order

SERIES	MODEL	FACEPLATES	OPTIONS	CARD TECHNOLOGY	STRIKE FINISH
ES100	– 15	L	M	-IPS	– 630
	15 Reader Body and 1500 Strike for ANSI Latchbolt Locks	**(blank)** Strike Body Only	**(blank)**** Convenience — Non-Monitored; Field configured to work with AH20, AH30, or AH40 wireless hubs	**IPS** HID iCLASS®, HID iCLASS SE® (SIO-enabled), HID iCLASS® Seos™, HID MIFARE® SE, HID DESFire® EV1 SE, MIFARE Classic, MIFARE DESFire EV1, NFC-enabled Mobile Phones: HID Mobile Access (NFC), Seos Apple Wallet (NFC)	**605** Bright Brass
		L Complete Pac for Latchbolts			**606** Satin Brass
					612 Satin Bronze
					613E Dark Oxidized Bronze Powder
	16 Reader Body and 1600 Strike for ANSI Latchbolt & Deadbolt Lockse	**D*** Complete Pac for Deadbolts	**M**** Security — Monitored (Latch and Door Position Monitor with REX)	**IPEXXXX**† Same as IPS but with factory loaded HID Elite Credential	**629** Bright Stainless Steel
					630 Satin Stainless Steel
					BSP Black Suede Powder
		S* Complete Pac for Latchbolts and Deadbolts	**H***** Without Monitoring; Factory Paired with AH20 1:1 Wiegand Hub	**BIPSXXXXX****† HID iCLASS, HID iCLASS SE (SIO-enabled), HID iCLASS Seos, HID MIFARE SE, HID DESFire EV1 SE, MIFARE Classic, MIFARE DESFire EV1, NFC & BLE-enabled Mobile Phones: HID Mobile Access (BLE and NFC), Seos Apple Wallet (NFC)	
			MH*** With Monitoring; Factory Paired with AH20 1:1 Wiegand Hub		
				BIPEXXXXX**† Same as BIPS but with factory loaded HID Elite Credential	

**Available with 1600 Only. ** Only available through ACP/CI channel. **XXXXX is a unique or customer specific key that is only reorderable for that specific company.*
**** Only available with L or S Complete Pac Options in 630 finish. † HID Authorization form will need to be filled out and signed by the end user who has authority of the ELITE KEY.*

Copyright © 2024, Hanchett Entry Systems, Inc., an ASSA ABLOY Group company. All rights reserved. Reproduction in whole or in part without the express written permission of Hanchett Entry Systems, Inc. is prohibited.

1500C Complete Electric Strike

For all cylindrical and mortise locksets with 3/4" latchbolt.

The 1500C includes a 1500 electric strike body and the 1LB faceplate kit for latchbolts.

1J Option
1KM Option
1K Option
1KD Option

Compatible Locksets

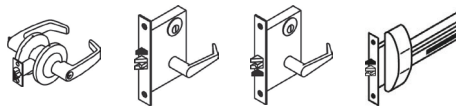

1600CLB Complete for Latchbolt Locks

The Complete One Box Solution for all cylindrical and mortise locksets.

The 1600CLB includes a 1600 electric strike body and the 1LB faceplate kit for latchbolts.

1J Option
1KM Option
1K Option
1KD Option

Compatible Locksets

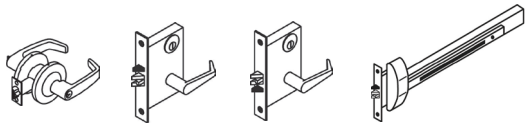

1600CS Complete Electric Strike

The Complete One Box Solution for all cylindrical and mortise locksets, with or without a 1" deadbolt.

The 1600CS includes a 1600 electric strike body, the 1LB faceplate kit for latchbolts and the 1DB faceplate kit for deadbolts.

1J Option
1KD Option
1ND Option
1K Option
1N Option
1NTD Option
1KM Option
1NM Option

Compatible Locksets

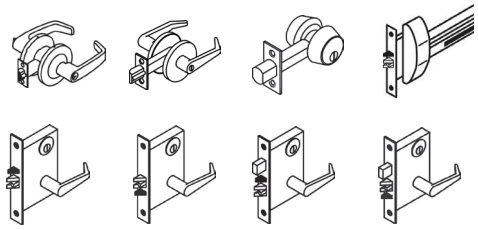

1600CDB Complete for Deadbolt Locks

The Complete One Box Solution for all locksets with a 1" deadbolt.

The 1600CDB includes a 1600 electric strike body and the 1DB faceplate kit for deadbolts.

1N Option
1ND Option
1NM Option
1NTD Option

Compatible Locksets

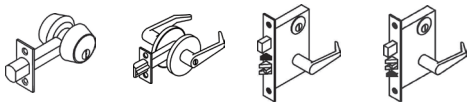

1500 | 1600 | ES100 Series Faceplate Options

OPERATION

Cylindrical Locksets | Mortise Locks without Deadbolt

After releasing the latchbolt, the keeper returns to the locked position.

4-7/8" × 1-1/4"
[123.8mm x 31.75mm]

1LB Option

The Latchbolt Solution: Includes the hardware to accommodate every cylindrical and mortise lock up to a 3/4" [19mm] latchbolt. For metal frame applications.

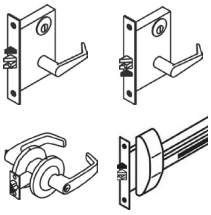

OPERATION

Cylindrical Locksets | Mortise Locks without Deadbolt

After releasing the latchbolt, the keeper returns to the locked position.

9" × 1-3/8"
[123.8mm x 34.9mm]

1LB-2 Option

The Latchbolt Solution: Includes the hardware to accommodate every cylindrical and mortise lock up to a 3/4" [19mm] latchbolt. For wood frame applications.

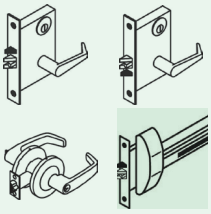

OPERATION

Mortise Locks with Deadbolt

After releasing the latchbolt, the keeper returns to the locked position.

4-7/8" × 1-1/4"
[123.8mm x 31.75mm]

1DB Option (1600 Only)

The Deadbolt Solution: Includes all hardware to retain, and release all mortise locks, and tubular deadbolts up to a 1" latchbolt. For metal frame applications.

Mode 1: Night latch function. The deadbolt is retracted during traffic hours. The latchbolt is released by the keeper and keeper returns to the locked position.

Mode 2: Lockout function. The electric strike will not release if the deadbolt is extended.

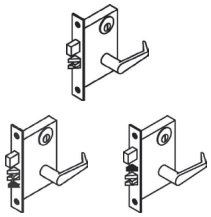

OPERATION

Mortise Locks with Deadbolt

After releasing the latchbolt, the keeper returns to the locked position.

9" × 1-3/8"
[123.8mm x 34.9mm]

1DB-2 Option (1600 Only)

The Deadbolt Solution: Includes all hardware to retain, and release all mortise locks, and tubular deadbolts up to a 1" latchbolt. For wood frame applications.

Mode 1: Night latch function. The deadbolt is retracted during traffic hours. The latchbolt is released by the keeper and keeper returns to the locked position.

Mode 2: Lockout function. The electric strike will not release if the deadbolt is extended.

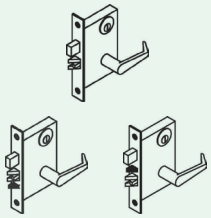

Copyright © 2024, Hanchett Entry Systems, Inc., an ASSA ABLOY Group company. All rights reserved. Reproduction in whole or in part without the express written permission of Hanchett Entry Systems, Inc. is prohibited.

1500 | 1600 | ES100 Series Faceplate Option Dimensions

1J

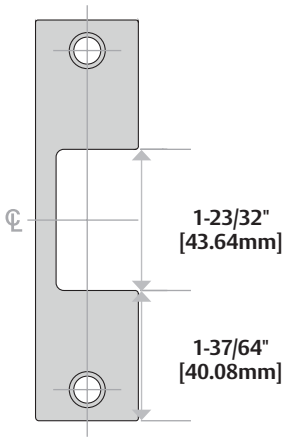

1K

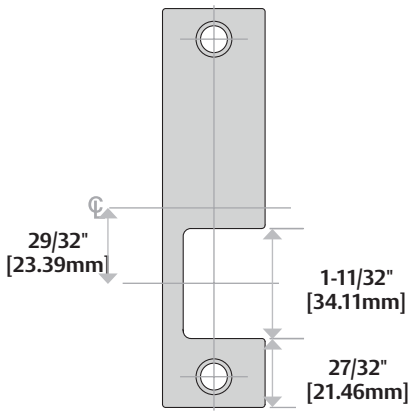

1KD

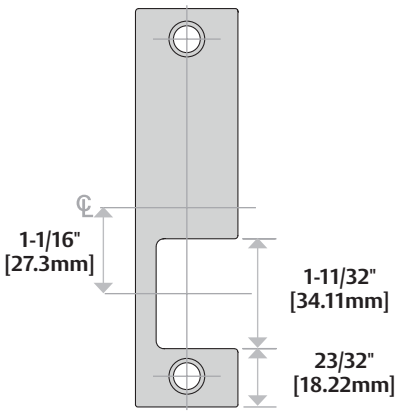

1KM

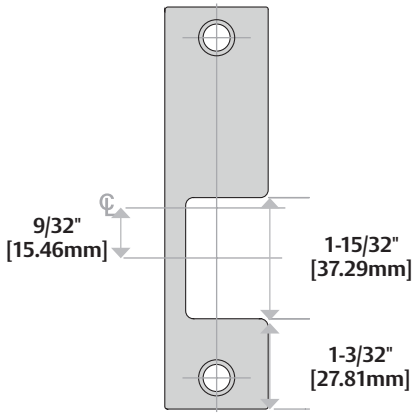

1N

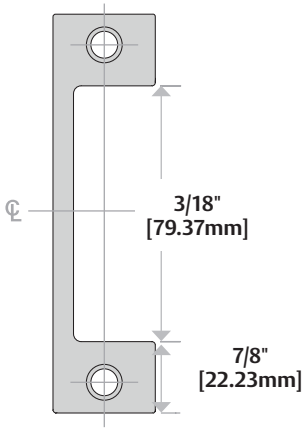

1ND

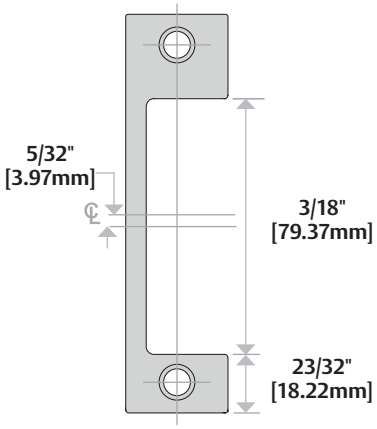

1NM

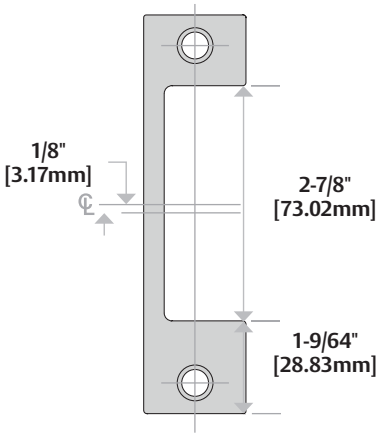

1NTD

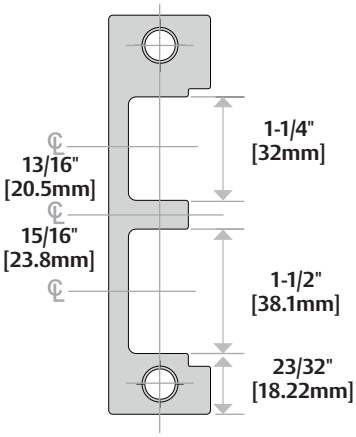

1500 | 1600 | ES100 Series Faceplate Option Dimensions

1J-2

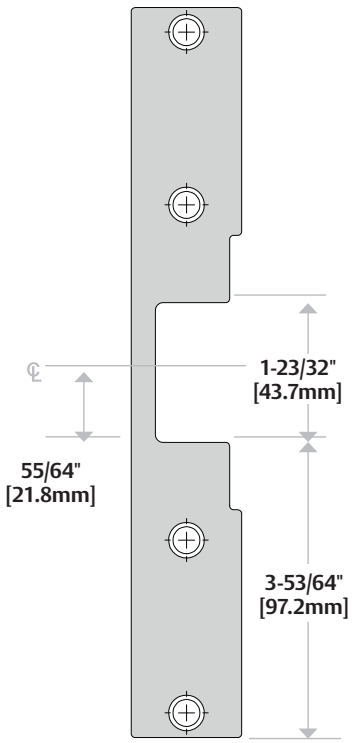

1KM-2

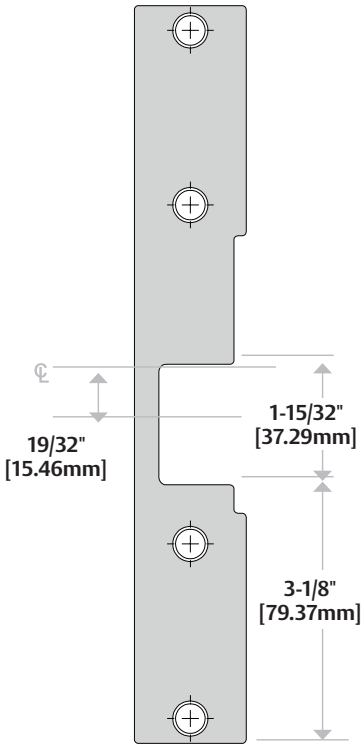

1N-2

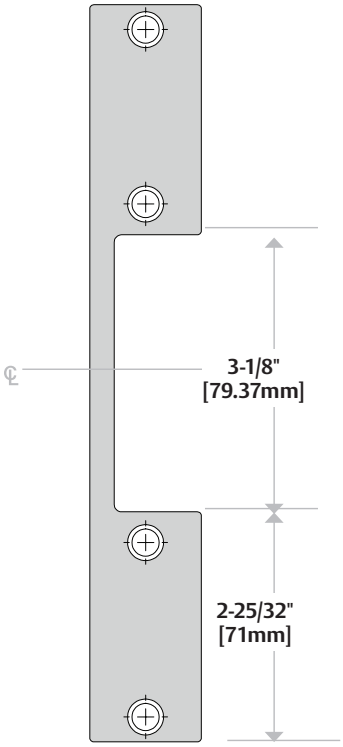

Copyright © 2024, Hanchett Entry Systems, Inc., an ASSA ABLOY Group company. All rights reserved. Reproduction in whole or in part without the express written permission of Hanchett Entry Systems, Inc. is prohibited.